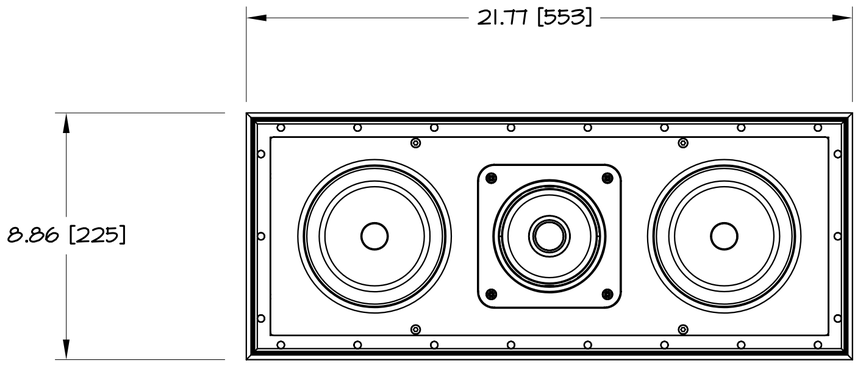

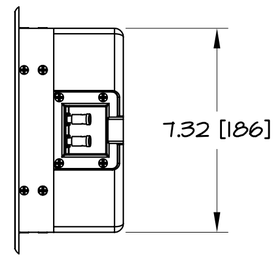

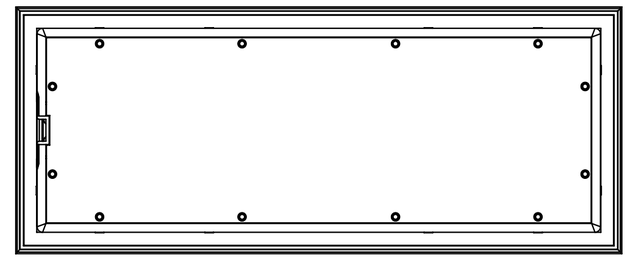

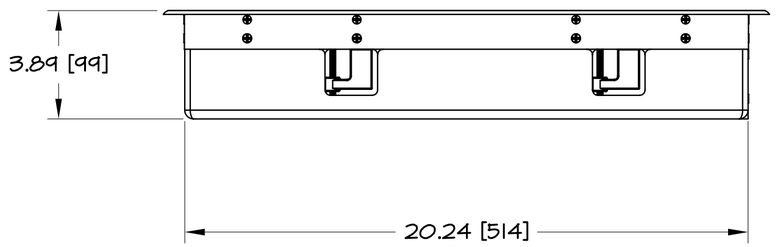

CINEMA LCRI

REV.

DRAWN - PART NUMBER

DRAWN BY: A.B.

RELEASED ON: 5AUG10

SCALE: 1:4

SHEET: 1 OF 1

SONANCE
212 Avenida Fabricante, San Clemente, CA. 92630
800 582-7777 949 492-7777 FAX 949 361-5579
www.sonance.com