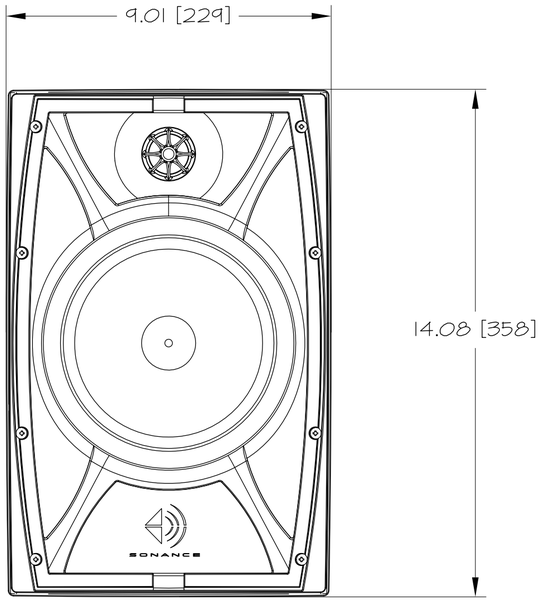

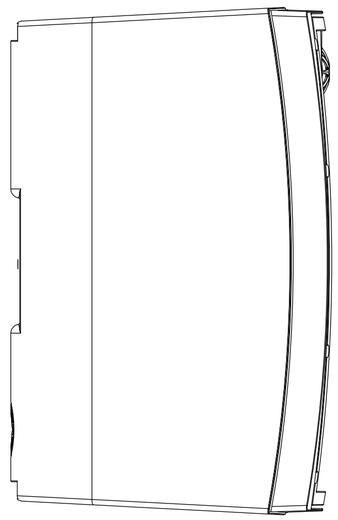

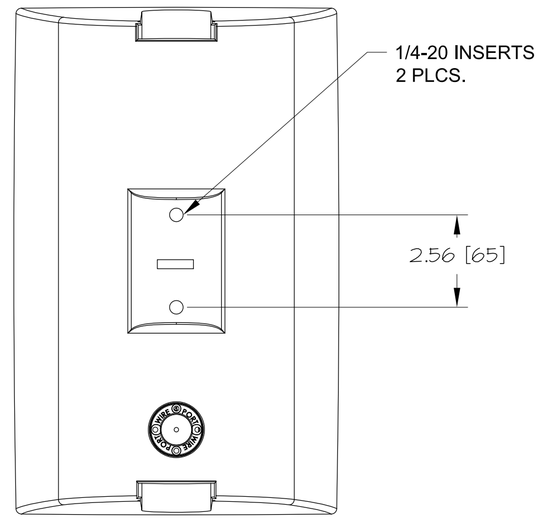

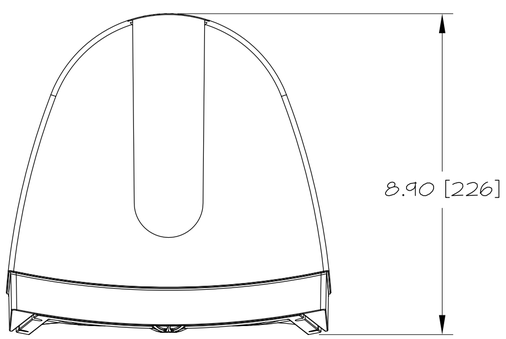

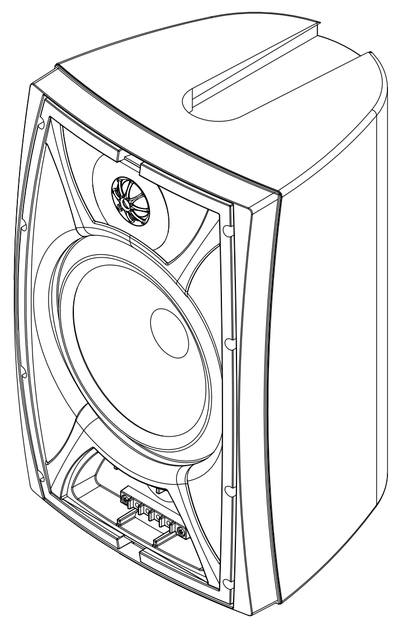

MARINER 8X LOUDSPEAKER

REV.

DRAWN - PART NUMBER

SCALE: 1:3

DRAWN BY: A.B.

SHEET: 1 OF 1

RELEASED ON: 17AUG10

SONANCE
212 Avenida Fabricante, San Clemente, CA. 92630
800 582-7777 949 492-7777 FAX 949 361-5579
www.sonance.com